TB280FR - Full Rotation Excavator

TAKEUCHI

Those in the know, know Takeuchi

OPERATING PERFORMANCE

Operating Weight	
Cab Rubber	19,077 lbs (8,653 kg)
Cab Steel	19,528 lbs (8,858 kg)
Maximum Digging Depth	14 ft 11 in (4,545 mm)
Maximum Dump Height	14 ft 8 in (4,470 mm)
Maximum Reach	23 ft 7 in (7,195 mm)
Maximum Bucket Breakout Force	16,335 lbs (7,409 kg)
Maximum Arm Digging Force	8,020 lbs (3,638 kg)
Arm Length	6 ft 7 in (2,000 mm)
Slew Speed	9.9 rpm
Traction Force	19,783 lbs (8,973 kg)

ENGINE

Make / Model	Yanmar / 4TNV98CT
Tier Rating	EPA Final Tier 4
Cylinders / Displacement	4 / 202 cu in (3.3 L)
Horsepower Gross (ISO 14396)	69.2 hp (51.6 kW)
Horsepower Net (SAE 1349)	66.5 hp (49.6 kW)
Rated Engine Speed	2,000 rpm
Maximum Torque	223 ft-lb @ 1,475 rpm (302 Nm)
Engine Lubrication	10.8 qt (10.2 L)
Cooling System	10.0 qt (9.5 L)
Fuel Tank Capacity	26.3 gal (99.0 L)
Fuel Consumption (65% of full load)	2.4 gal / hr (9.1 L / hr)
Electrical System	12 volts / 80 amps

UNDERCARRIAGE

Traction Drive Type	Planetary Reduction and Auto Shift Down
Parking Brake	Spring Applied, Hydraulically Released
Track Roller Type	Permanently Sealed, Triple Flanged
Track Rollers	5 per side
Track Width	17.7 in (450 mm)
Track Ground Contact Length	7 ft 3 in (2,210 mm)
Ground Pressure	
Rubber	5.5 psi (37.9 kPa)
Steel	5.6 psi (38.6 kPa)
Maximum Travel Speed	
Low Range	1.6 mph (2.6 km / hr)
High Range	3.1 mph (5.0 km / hr)

HYDRAULIC

Pump Type	Twin Variable Displacement Piston Pumps with Two Gear Pumps
Total Hydraulic Flow	52.5 gal / min (198.0 L / min)
Primary Auxiliary Hydraulic Flow	39.0 gal / min (148.0 L / min)
Secondary Auxiliary Hydraulic Flow	15 gal / min (58.0 L / min)
System Operating Pressure	3,990 psi (27.5 MPa)
Hydraulic Reservoir Capacity	18.6 gal (70.6 L)
Hydraulic System Capacity	31.7 gal (120.0 L)

WORKING DIMENSIONS

A. Maximum Reach	23 ft 7 in (7,195 mm)
B. Maximum Reach Ground Level	23 ft 1 in (7,045 mm)
C. Blade Maximum Lower	1 ft 3.9 in (405 mm)
D. Blade Maximum Lift	1 ft 7.9 in (505 mm)
E. Maximum Dig Height	21 ft 2 in (6,465 mm)
F. Maximum Dump Height	14 ft 8 in (4,480 mm)
G. Maximum Dig Depth	14 ft 11 in (4,545 mm)
H. Maximum Vertical Dig Depth	11 ft 5 in (3,490 mm)

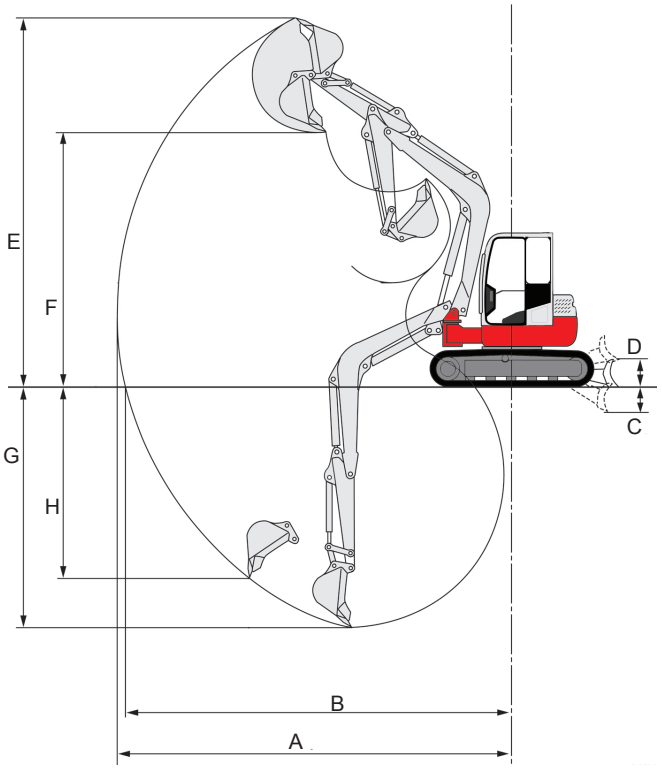

Product Features

ENGINE
- ♦ EPA Final Tier 4 Compliant with DPF
- ♦ Turbocharged
- ♦ Automatic Fuel Bleed System
- ♦ Extended Life Coolant
- ♦ Dual Element Air Cleaner
- ♦ Automatic Idle
- ♦ Selectable Work Modes
- ♦ Large Capacity Radiator
- ♦ High Capacity Fuel Filters

ELECTRICAL
- ♦ Multi-Information Display Includes Digital Gauges for
- ♦ Coolant Temperature, Fuel Level, Engine Speed, PM (Particulate Matter) Accumulation, and Lift Load Percentage Audible and/or Visual Alerts for Charging System, Engine Oil, Pressure, Fuel / Water Sensor, High Engine Coolant Temperature, Engine Air Filter Restriction, Fuel Filter Restriction, Low Fuel Level, Automatic Idle, Regeneration Status, Engine Preheat, Travel Speed Indicator, Work Light Indicator, Blade Float Indicator
- ♦ 12 volt System with 80 amp Alternator
- ♦ Multi Function Switch Bank
- ♦ Work Lights: Boom, Side Cover
- ♦ Engine Preheat
- ♦ Travel Alarm and Horn

UNDERCARRIAGE AND FRAME
- ♦ Triple Flanged Track Rollers
- ♦ Automatic Track Tensioner
- ♦ 2-Speed Travel with Automatic Shift
- ♦ Heavy Duty Dozer Blade
- ♦ Large Wrap Around Counterweight
- ♦ 17.7” Rubber Tracks
- ❍ 17.7” Road Liner Tracks
- ❍ 17.7” Steel Tracks

HYDRAULIC
- ♦ Cushioned Main Boom, Arm, and Offset Cylinders
- ♦ Pilot Joystick Controls with Proportional Slide Switch for Auxiliary Circuit
- ♦ Primary Auxiliary Hydraulic Circuit Plumbed to Arm with Selectable 1-Way and 2-Way Operation
- ♦ Auxiliary Detent (Primary Circuit)
- ♦ High Flow Primary Auxiliary Hydraulics, 39 gpm with Three Selectable Flow Modes and In-Cab Adjustment
- ♦ Second Auxiliary Circuit with Adjustable Flow Control
- ♦ Pilot Accumulator
- ♦ High Capacity Side-by-Side Hydraulic Oil Cooler and Radiator

WORKING EQUIPMENT
- ♦ Main Boom Cylinder Guard
- ♦ Patented Side-to-Side (STS) Offset Boom System
- ♦ Long Arm with Integrated Thumb Mount
- ♦ Boom Holding Valve with Lift Overload Alarm
- ❍ Dual Pin Position Bucket
- ❍ Mechanical Bucket Quick Coupler
- ❍ Main Pin Hydraulic Thumb

OPERATOR’S STATION
- ♦ Enclosed Cab with Air Conditioner, Heat, Defrost, Wiper, Cab and Boom Work Lights, Deluxe AM / FM / MP3 Radio, Retractable Front Glass with Cylinder Assisted Lift and Removable Lower Section
- ♦ Tilt-up Operator Station
- ♦ Six Way Adjustable Suspension Seat with Adjustable Arm Rests
- ♦ Quick Change Control Pattern (ISO or SAE)
- ♦ Proportional Slide Switch for Auxiliary Hydraulics
- ♦ 2” Retractable Seat Belt
- ❍ 3” Seat Belt

♦ - Standard ❍ - Optional

MACHINE DIMENSIONS

A.	Transport Length	20 ft 3 in (6,175 mm)
B.	Transport Height	9 ft 1 in (2,770 mm)
C.	Undercarriage Length	9 ft 4 in (2,855 mm)
D.	Track Ground Contact Length	7 ft 3 in (2,210 mm)
E.	Dozer Blade Height	1 ft 7.6 in (500 mm)
F.	Counter Weight Ground Clearance	2 ft 4 in (715 mm)
G.	Tail Swing (Slew) Radius	4 ft 2.4 in (1,280 mm)
H.	Dozer Blade Width	7 ft 7 in (2,300 mm)
J.	Min. Front Radius	4 ft 7 in (1,395 mm)
K.	Offset Working Distance (Right)	3 ft 1.2 in (945 mm) @ 15°
L.	Offset Working Distance (Left)	2 ft 7.5 in (800 mm) @ 30°
M.	Track Width (Rubber)	17.7 in (450 mm)
P.	Ground Clearance	1 ft 1.7 in (350 mm)
Q.	Undercarriage Width	7 ft 7 in (2,300 mm)

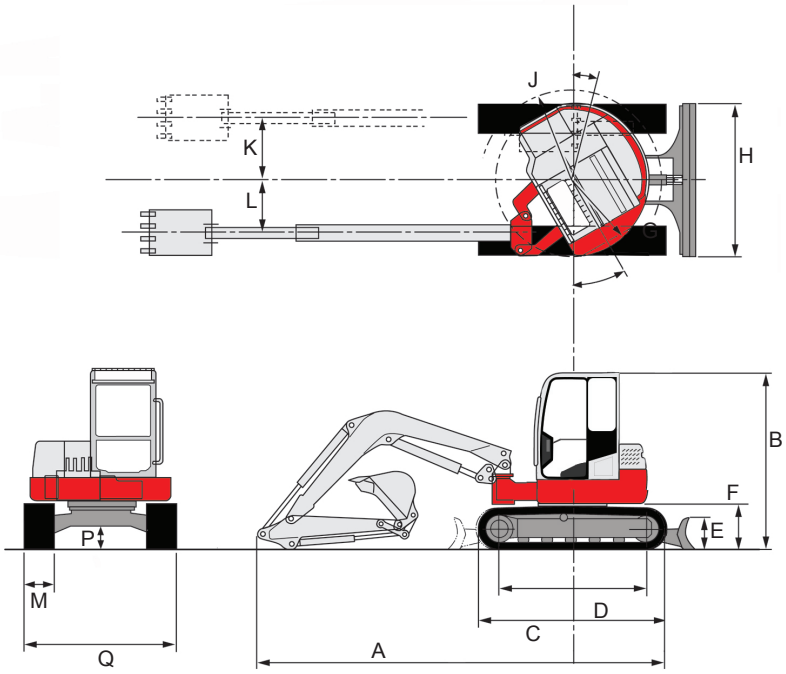

TAKEUCHI
Those in the know, know Takeuchi

© 2014 Takeuchi Manufacturing (U.S.), Ltd. All Rights Reserved. Printed in the U.S.A. In accordance with our established policy of continued improvement, specifications and features are subject to change without notice. Pictures may show options other than standard equipment.
FORM: TB280FR Spec Sheet May. 2014